PARTS MANUAL

Chest Freezer

HCF524W3 HA AA

Product Code
62263-A

AU NZ

Haier

CONTENTS

INTRODUCTION 2

FREEZER COMPONENTS 3

INTRODUCTION

BRAND	VOLTAGE	MODEL	PRODUCT CODE
Fisher & Paykel	220-240 50Hz	HCF524W3 HA AA	62263-A

MODELS

The models covered by this manual are listed on the front cover.
The information detailed in this manual is subject to change without notice. The latest version is indicated by the reprint date and replaces any earlier editions.

KIT PARTS

Where a part number is shown against the descriptions they are also available as separate items. In addition, some parts may be supplied with these kits that are not available as separate items, and are therefore either not listed, or a part number is not shown against the part description in this manual.

PARTS LIST KEY

NI	As a part reference, indicates the part is not illustrated on the diagram.
NOT USED	As a part number, indicates the diagram part reference is not used in this manual.
NS	As a part number, indicates the part is not servicable.

NZ

tel: 09 273 0600
fax: 09 273 0656
e-mail: nz.customercare@fisherpaykel.com
www.fisherpaykel.com/nz

AU

tel: 07 3826 9100
fax: 07 3826 9164
e-mail: aus.customercare@fisherpaykel.com
www.fisherpaykel.com/au

FREEZER COMPONENTS

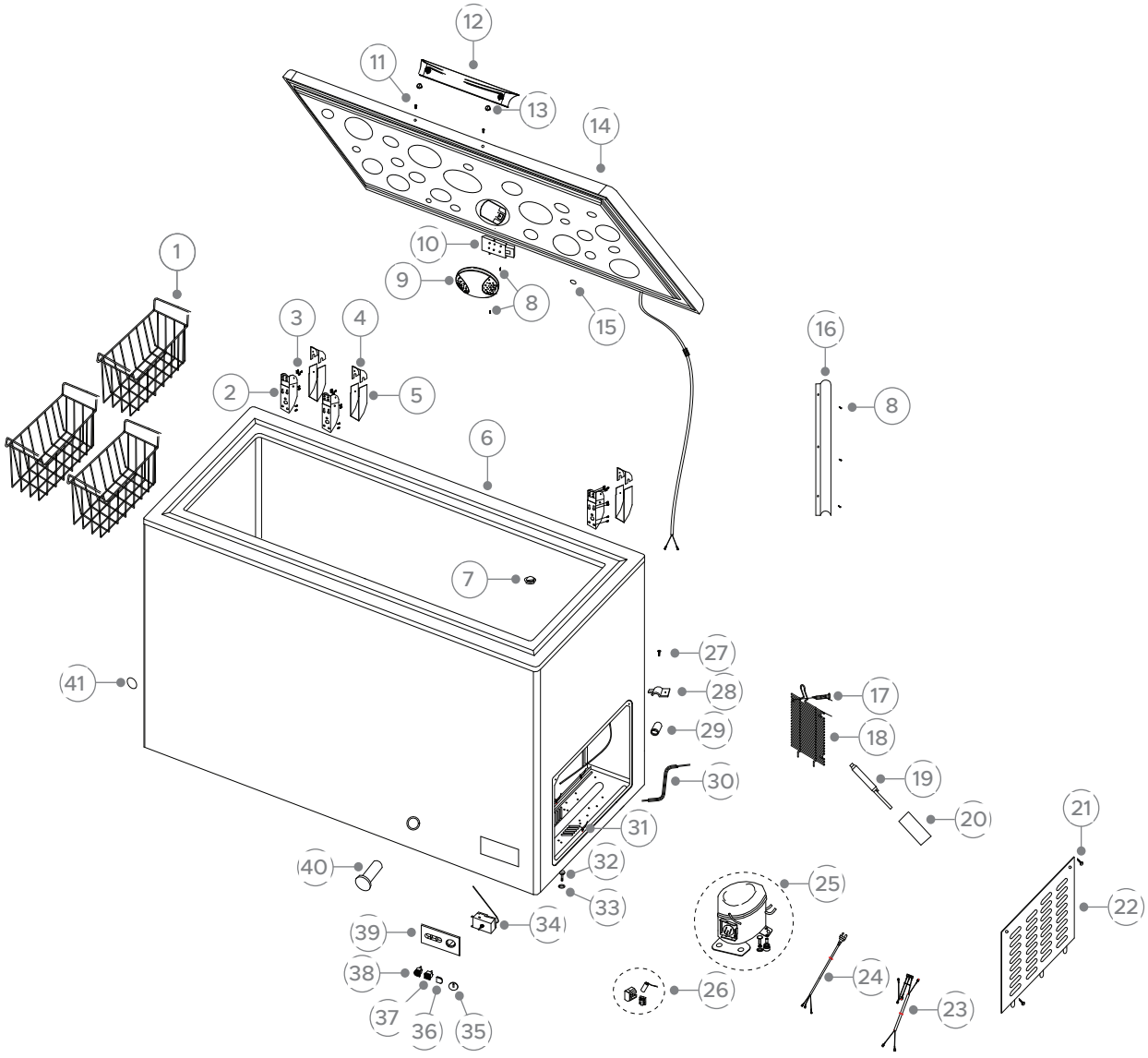

DWG006110

FREEZER COMPONENTS

REFERENCE	PART NUMBER	PART DESCRIPTION
1	H0070807530	BASKET HCF524
2	H0070816333	HINGE WITH SPRING HCF
3	H0070601233	SCREW HINGE
4	H0070203942	COVER HINGE TOP
5	H0070204349	BOTTOM HINGE COVER
6	H0070841017	#N/A
7	H0070202866B	PLUG
8	H0060801032	SCREW
9	H0070203775	COVER LAMP
10	H0074000495	LED
11	H0077010031	SCREW PHILIPS
12	H0070201714	LID HANDLE ASSY
13	H0070205758	COVER SCREW HANDLE FREEZER
14	H0070841020	#N/A
15	H0072040402	CAP
16	H0070202453	LID LAMP WIRE COVER(SHORT)
17	H0077010036	SCREW PHILIPS
18	H0070103022	COVER COMPRESSOR COMPARTMENT
19	H0060703265	FILTER DRIER
20	H0070300427	CONDUIT PIPE
21	H0077010059	SCREW
22	H0070106186PB	GRILLE CF
23	H00704019598	COMBINATION WIRE
24	H0070400262	CORD POWER
25	H0060705348	COMPRESSOR
26	H0060705348F	COMPRESSOR ACCESSORY PACK
27	H0070104651	CLAMP POWER CORD HCF
28	H0070601305	SCREW CLAMP POWER CORD HCF148A
29	H0070400259	GROMMET & SADDLE POWER CORD
30	H0070700800A	PROCESS PIPE

FREEZER COMPONENTS

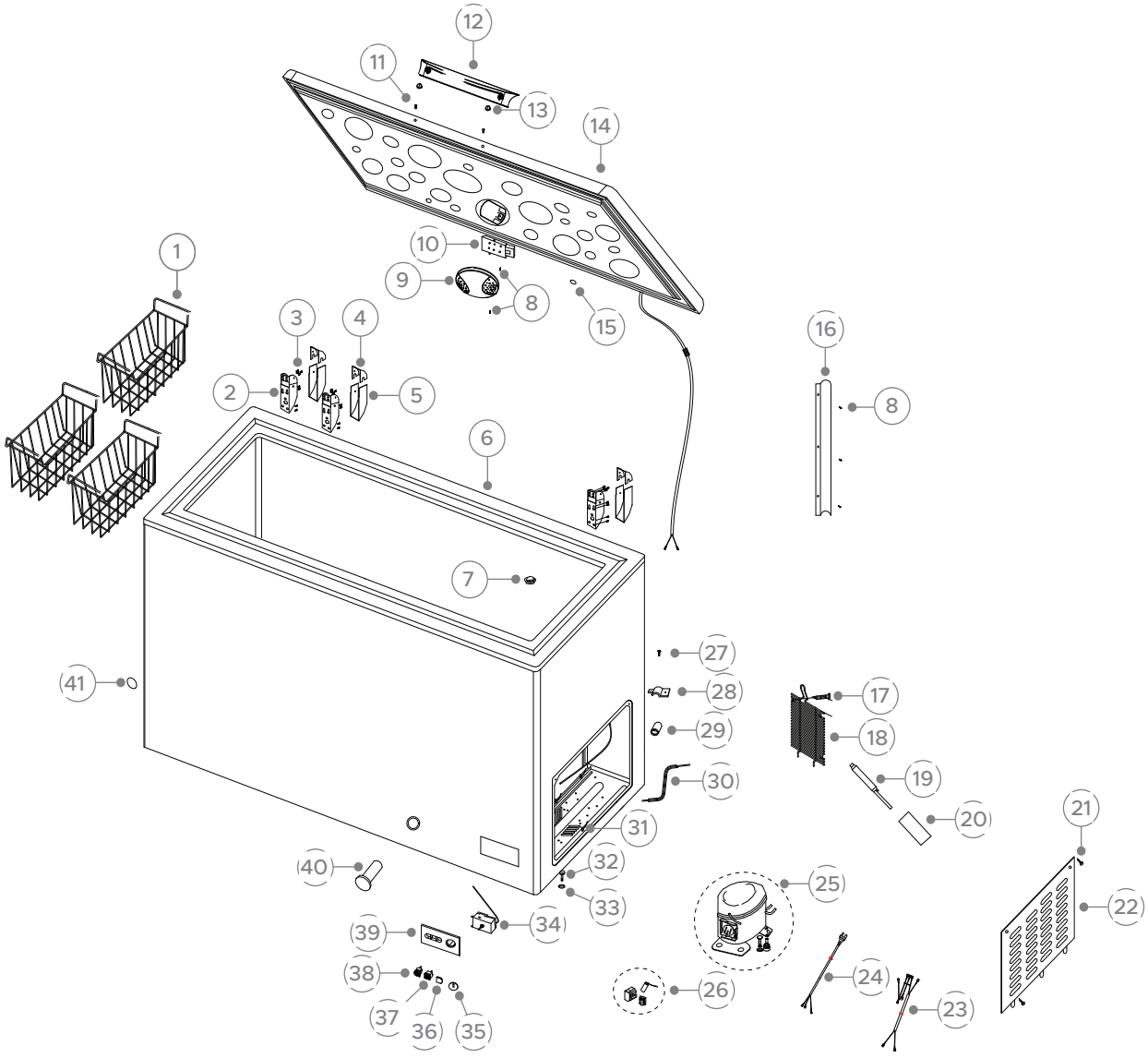

DWG006110

FREEZER COMPONENTS

REFERENCE	PART NUMBER	PART DESCRIPTION
31	H0072130029	TIE PACKING
32	H0077050006	SCREW COMPRESSOR HCF
33	H0070601303	WASHER SERATED
34	H0074000212	THERMOSTAT
35	H0070203732	KNOB CONTROL FZ
36	H0070203980	LIGHT COVER
37	H0074091276	SWITCH SUPER COOL
38	H0074091277	NEON GREEN
39	H0070201491P	CONTROL PANEL COVER
40	H0072040012C	DRAIN PLUG
41	H0070201812	CAP CABINET
NI	H0070202413	SCRAPER DEFROST

www.fisherpaykel.com

© Fisher & Paykel Appliances 2022. All rights reserved.

The models shown in this guide may not be available in all markets and are subject to change at any time.

The product specifications in this guide apply to the specific products and models described at the date of issue. Under our policy of continuous product improvement, these specifications may change at any time.

For current details about model and specification availability in your country, please go to our website or contact your local Fisher & Paykel dealer.

PRODUCT CODE: 62263-A 03.22